H-22

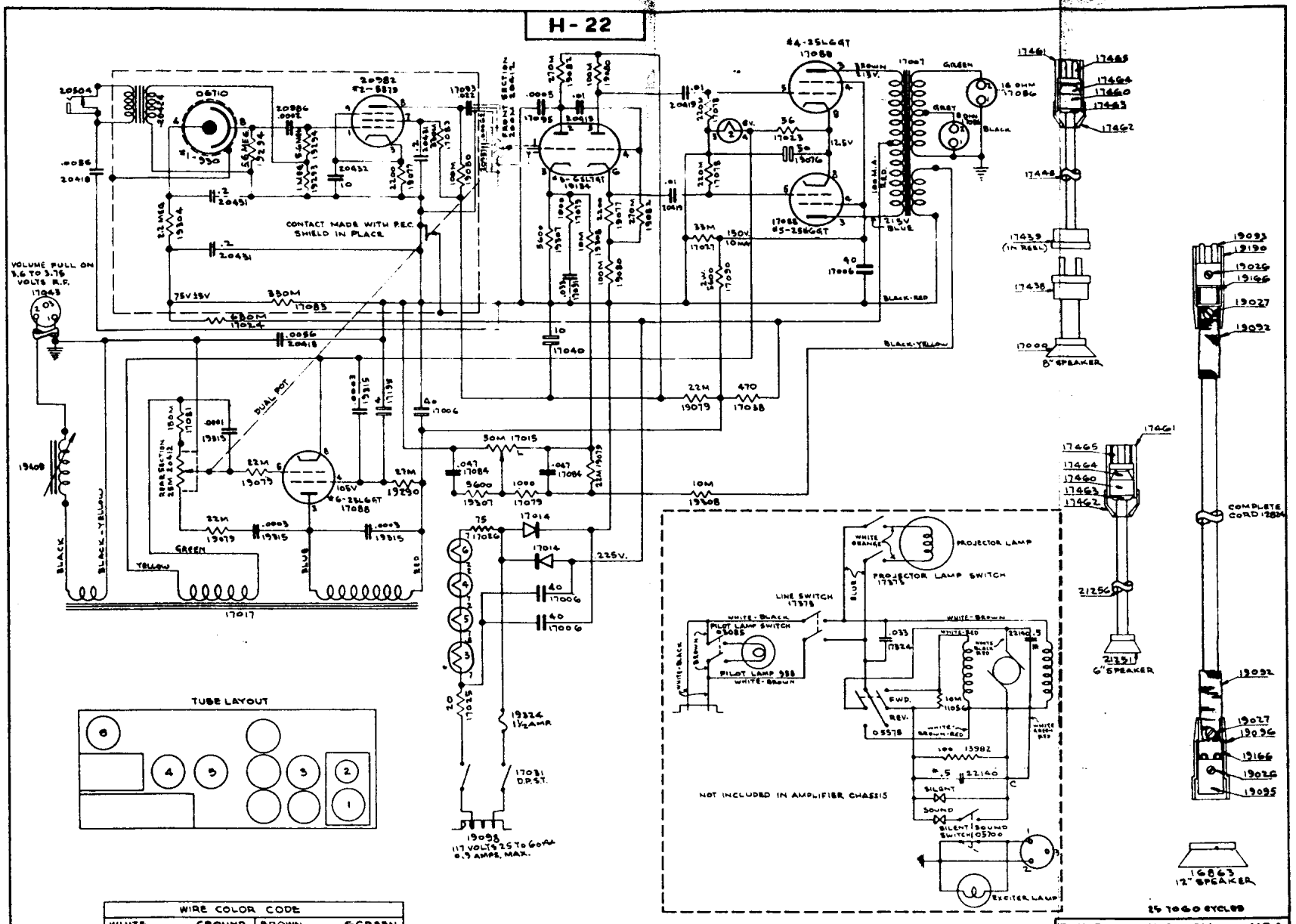

WIRE COLOR CODE			
WHITE	GROUND	BROWN	SCREEN
YELLOW	CATHODE	BLACK	AC
RED	B+	WHITE & BLACK	B-
GREEN	GRID		
BLUE	PLATE		

ALL VOLTAGES MEASURED WITH METER WITH 11 MEGOHM INPUT.

F.O.S. SERIAL NO'S. 767267 & UP

REVISION OF OCTOBER 1950

Bell & Howell Co. Chicago U.S.A.

AMPLIFIER WIRING DIAGRAM 05975
FOR DESIGNS 188 (ALL)

DATE 6-20-51	SERVICE DATA	DRAWN BY / APVD.