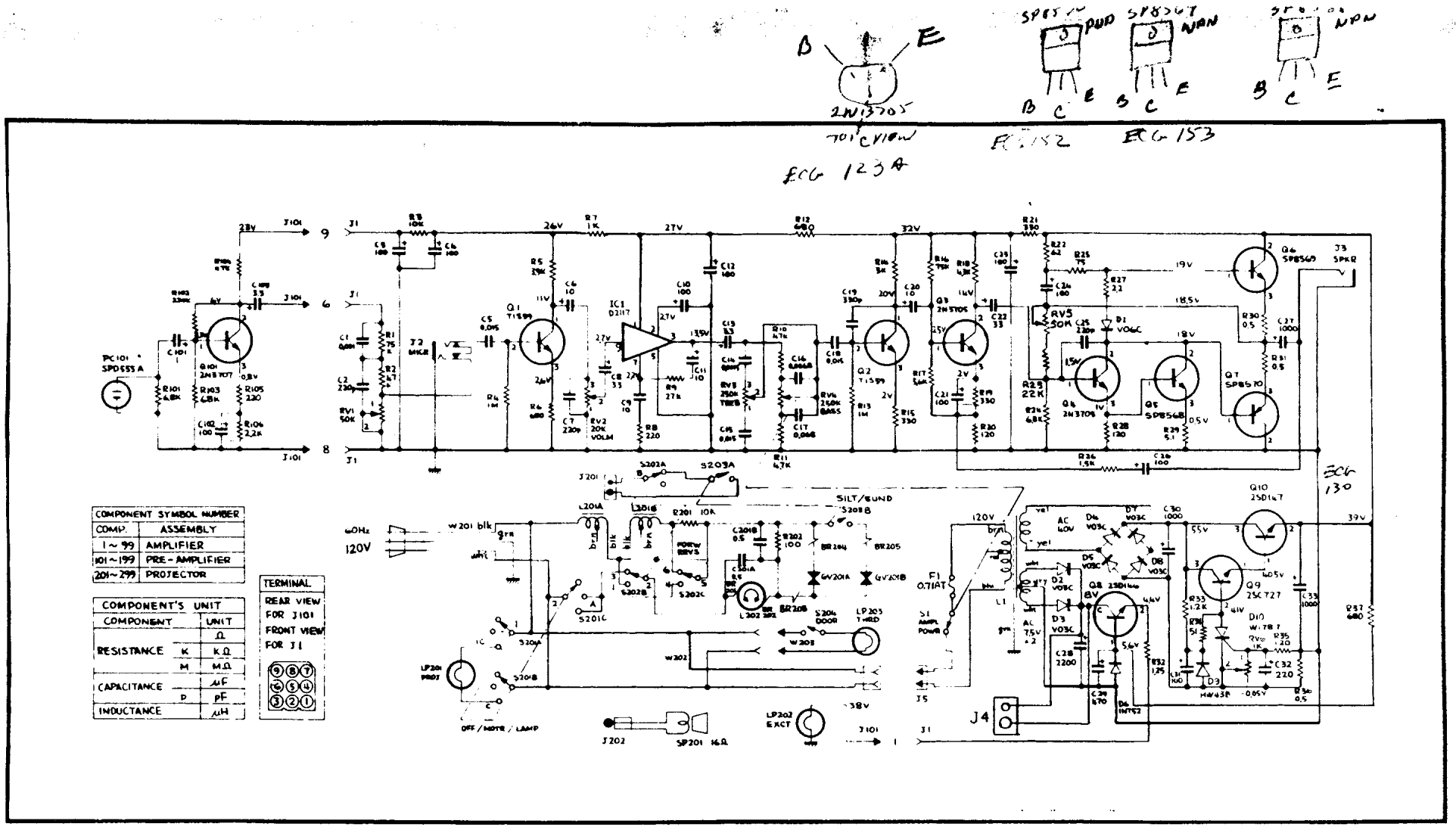

(050939) Schematic Circuit Diagram - 8399 T